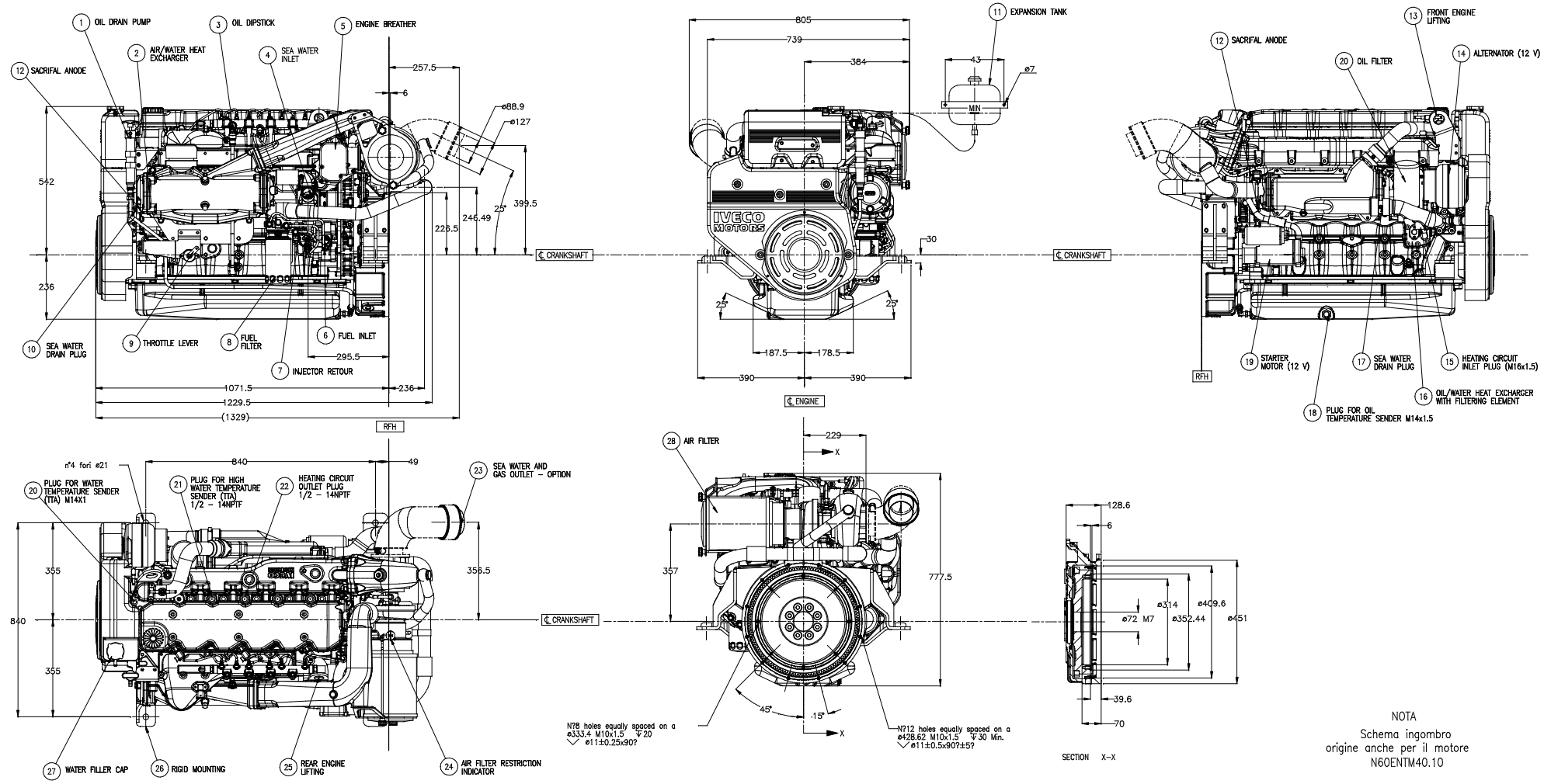

NOTA
Schema ingombro
origine anche per il motore
N60ENTM40.10

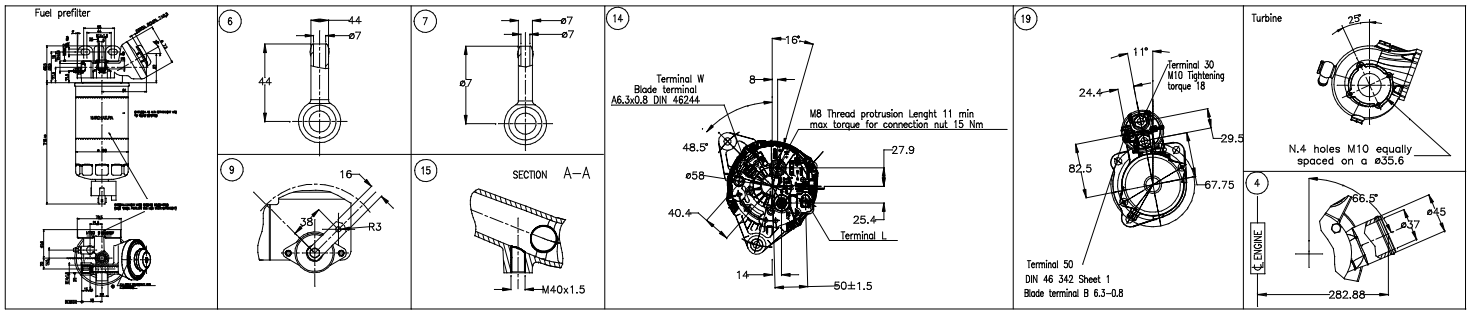

RFH = REAR FACE FLYWHEEL HOUSING

CAD DRAWING
HANDLING ON CAD SYSTEM ONLY

Iveco S.p.A. 18-0011							
Presentificati generali Aggregate Vorpräfiles Assemblies Iveco S.p.A. 18-0000							
	Date	Name					
Drawn by	01/10/04	UTS					
Checked by		Pagnoscelli	00	1-214816-032-135	01-12-04	F.C.	
Standards		Burgaud	Indice Index	Aenderungen-Nota-Nr. Modification Motivation Code	Data Datum Date	Nome Name	
Department	E135	Approved					

Materiale/Werkstoff/Material | Standards | Code No

Masse (kg.) | Sr. Greco
Massstab | Maßstab-Nr.
Scale | Scale-No

Designazione/Benennung/Designation | Lexicon Code 143340

ENGINE LAYOUT
FIGURINO MOTORE

Modello/Model/Model N60ENTM37.10

IVECO
Iveco SpA

No 8033259 D A 54–9800 | Sheet 1/1

Origine | Replaced fort | Replaced by