DWG STATUS DATE	ST	REV	CHANGE DESCRIPTION	ENGINEERING CHANGE INDEX	CK	SUP
04ND11	.	.	00)RELEASED	12C2BDV006736	PP	.
.	.	.	.	.	.	.
.	.	.	.	.	.	.
.	.	.	.	.	.	.

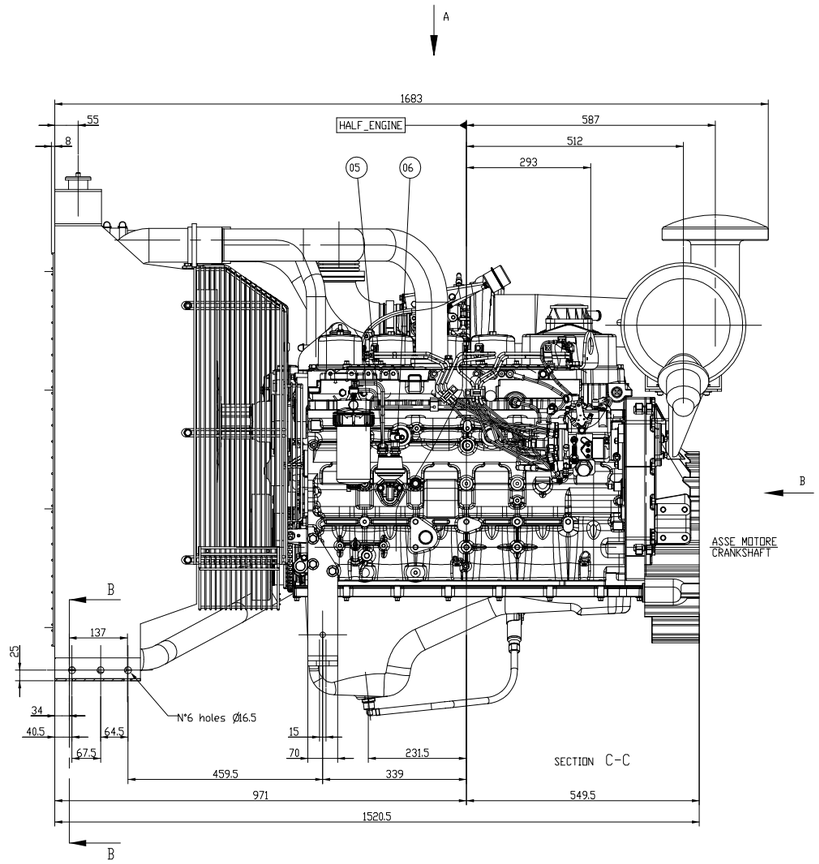

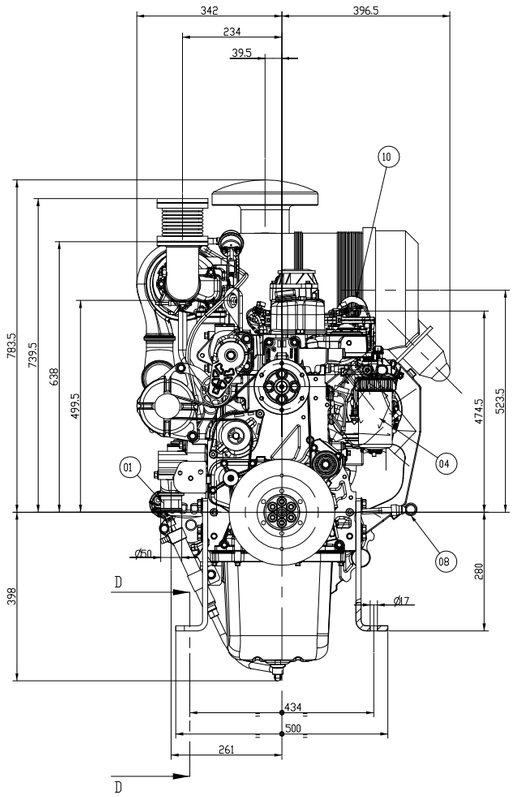

SECTION E-E

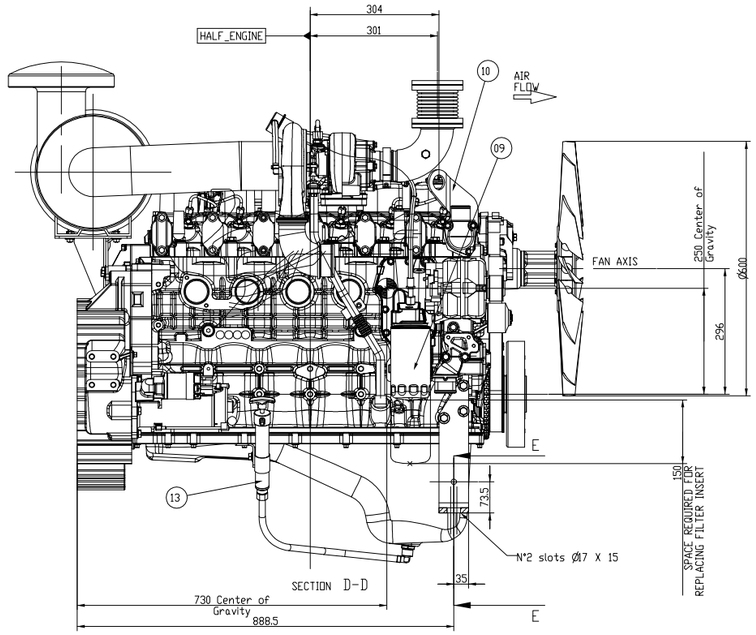

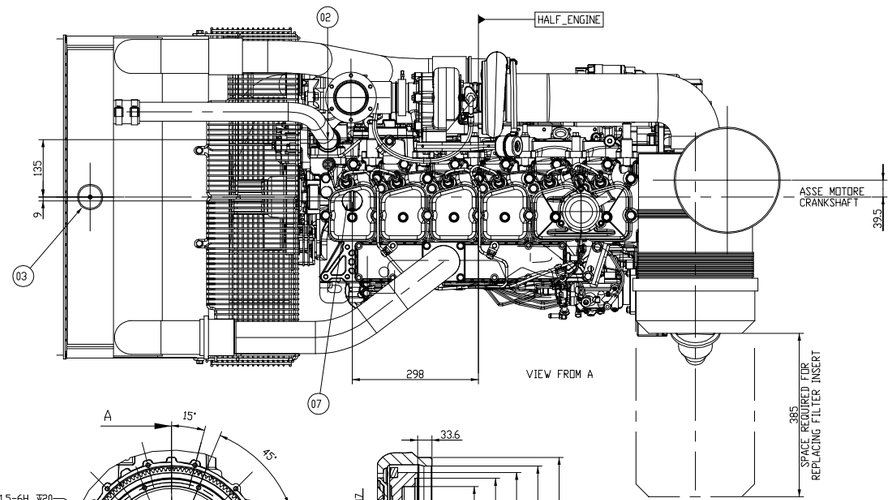

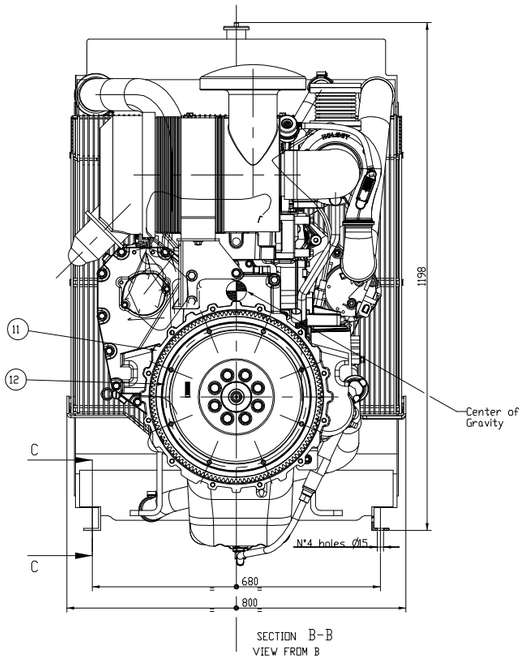

SECTION B-B
VIEW FROM B

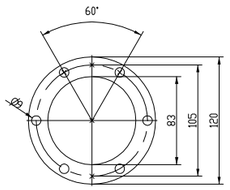

EXHAUST FLANGE DETAIL
SCALE 1:2

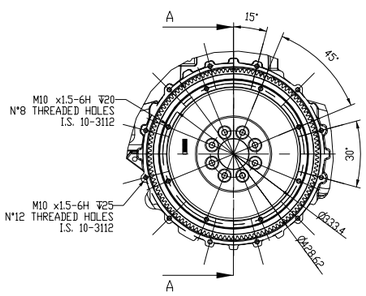

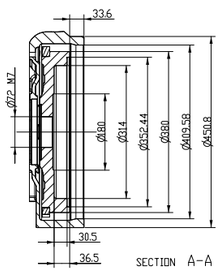

SECTION A-A

13	Pompa a mano svuotamento olio-SE richiesta	Oil drain hand pump - IF REQUIRED
12	Volano 11.5"	11.5" flywheel
11	Carter coprivolano	SAE3 housing
10	Gancio sollevamento motore	Hook
09	Filtro olio	Oil filter
08	Asta verifica livello olio	Oil dipstick engine
07	Tappo introduzione olio	Oil filter engine
06	Uscita combustibile diam. 8	Fuel outlet diam. 8
05	Entrata combustibile diam. 8	Fuel inlet diam. 8
04	Filtro combustibile	Fuel filter
03	Tappo riempimento	Fresh water filter
02	Uscita acqua	Water outlet
01	Entrata acqua	Water inlet

CLEANLINESS TARGETS: FPT-MA-N050
FOR FURTHER DRAFTING STANDARDS SEE FPT.PEN001
FOR GENERAL TOLERANCE SEE
CONFIDENTIAL INFORMATION PRODUCT LIABILITY & PROTECTION NOTICE TO FPT INDUSTRIAL

WEIGHT	RAW No.	CHA CODE	LEXICON	SCALE
0.000			145340	1:5

SURFACES FPT.PEN001
WORKPIECE EDGES FPT.PEN001

FPT INDUSTRIAL

DENOMINATION	SIGNATURE		DATE
NEF67TM1F	DRAFTER	DETA	03ND11
	CHECKER	PEDROTTI	04ND11
TECHNICAL CODE 54-975	SUPERVISOR		
	LABORATORY		
Pro/Engineer Wildfire	MANUFACT. ENG.		

CHANGE NEW/MANDRED
CHANGE METRIC
DIMENSIONS SHOWN IN MILLIMETERS
TOLERANCE SPECIFIED

DRAWING NAME: DRAWING-ENGINE COMPLETE

SHEET NUMBER 1 of 1

DRAWING NUMBER 5801535247

DWG STATUS	REV	SIZE
	001	A0

Proprieta' della FPT Industrial SpA
Senza autorizzazione scritta della stessa il presente disegno non potra' essere usato
Vietato per la costruzione dell' oggetto rappresentato o venire comunicato a terzi o riprodotto. La società proprietaria tutela i propri diritti in tutte le sedi opportune
Property of FPT Industrial SpA
Ohne schriftliche Genehmigung darf diese Zeichnung weder
für
Herstellung des dargestellten Gegenstandes verwendet noch reproduziert bzw. Dritten übergeben werden. Jede Rechts-
verletzung wird gerichtlich verfolgt
Proprietary rights reserved by FPT Industrial SpA
This drawing shall not be reproduced or used in any utilized for the manufacture of the component or unit herein illustrated and must not be released to other parties, without
written consent. Any infringement
will be legally pursued.

FPT Industrial S.p.A.
PRODUCT ENGINEERING
DESIGN AREA